L handle lock B-1313

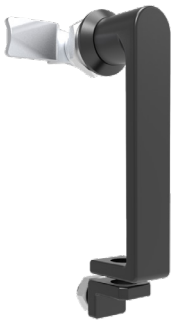

RL

IP65

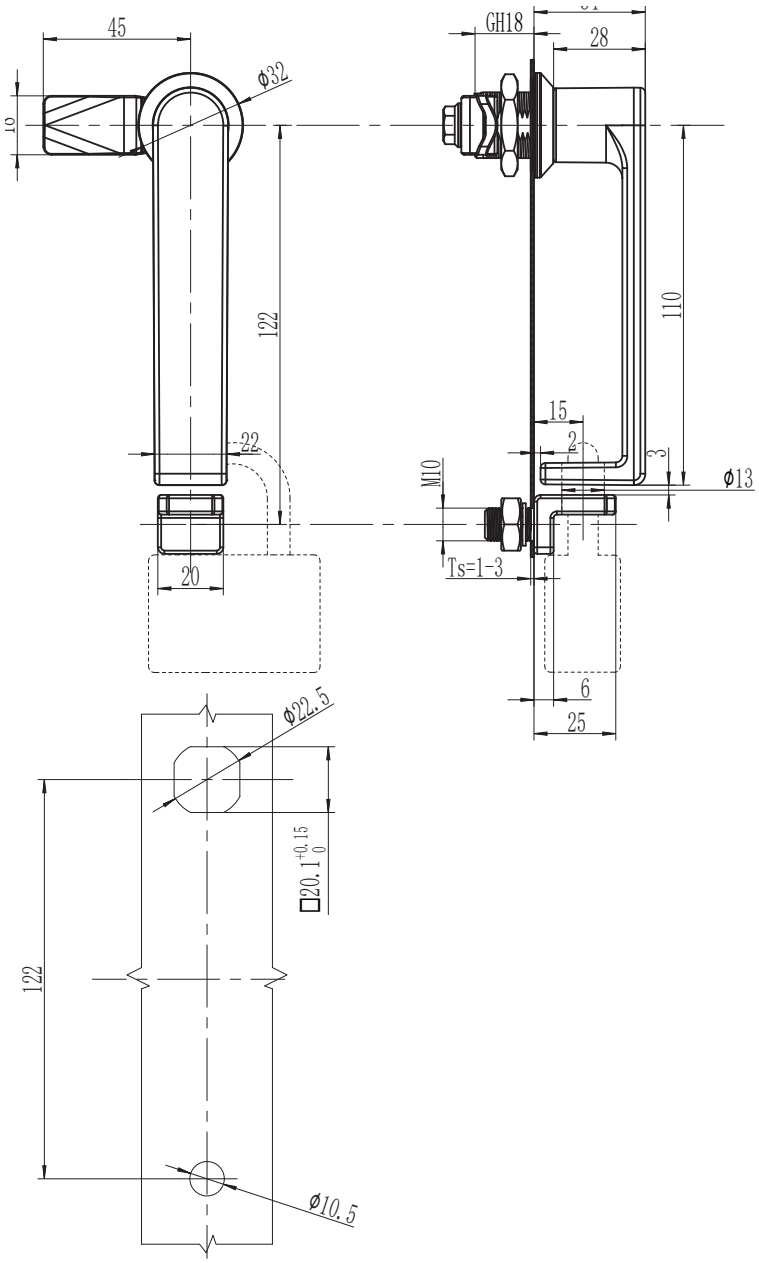

1.Material and surface treatment:
Lock body, handler: Zamak DIN-EN 1774-ZnAl4Cu1 or SUS304
Steel bolt: iron galvanized or SUS304
Sealing ring: EPDM foam

2. Performance parameters:
Protection class: IP65

3. Remarks:
Stainless steel Padlockable on request

1.材质及表面处理:
锁体，手柄：5#锌合金 SUS304
钢栓 ：铁镀锌或 SUS304
密封圈：EPDM发泡胶。

2.性能参数：防护等级：IP65

3.备注：
配不锈钢挂锁

锌合金 Zinc alloy		不锈钢 Stainless steel
喷塑黑 Powder coating black	亮铬 Bright chrom	
B-1313-40	B-1313-30	B-1313-A1

如需获得产品3D模型图，请联系WWW.FORND.COM